	CHKD

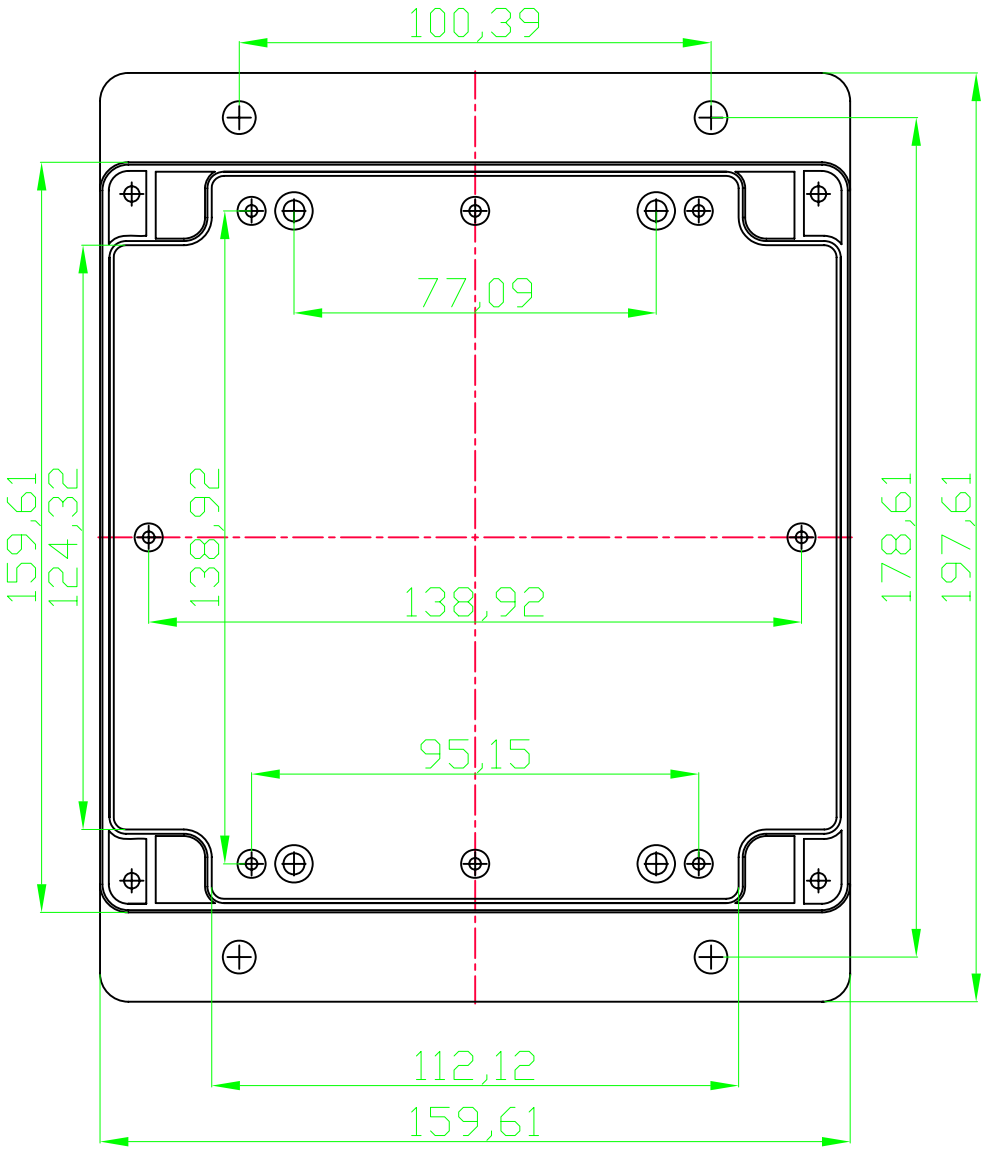

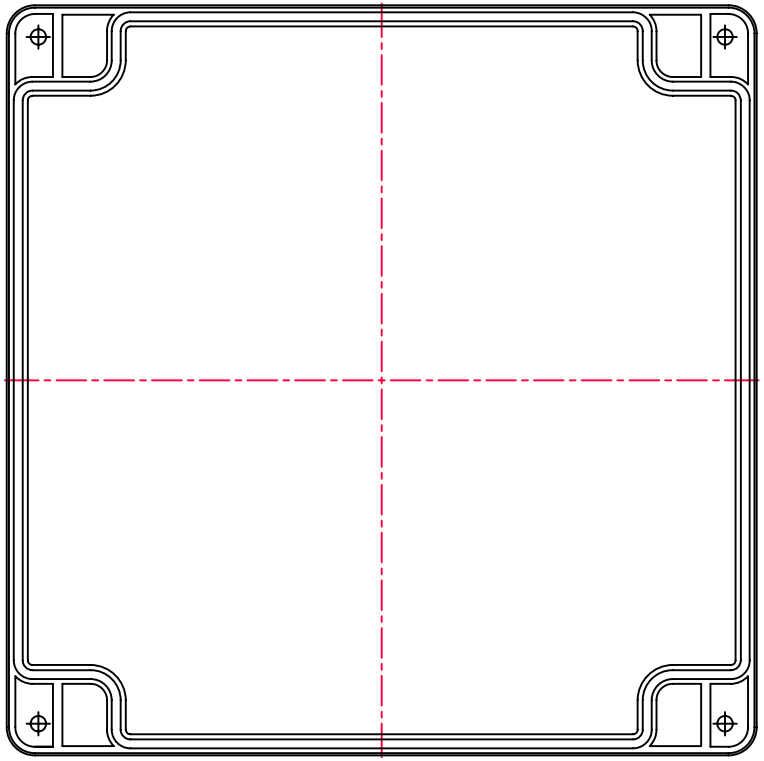

DETACHED LISTS

(mm)

TOLERANCES EXCEPT AS NOTED

MM	
.0 ± 0.2	±
.00 ± 0.1	±
.000 ± 0.05	±

ANGLES ± 5°

THIRD ANGLE PROJECTION

CHKD zhongjoe	DATE 01/12/09'		
MFD SUNNY	DATE 01/16/09'		
APPVL	DATE		
MATERIAL : ABS			
QT'Y :			
FINISH:			
SCALE : 1:1			

China enclosure ??????

CHINA ENCLOSURE

WWW.CHINA-ENCLOSURE.COM

TITLE

CN612

DRAWING NO.	SIZE	REV
/PART NO.	A4	REV REV2
DO NOT SCALE DRAWING	SHEET 1	OF 1